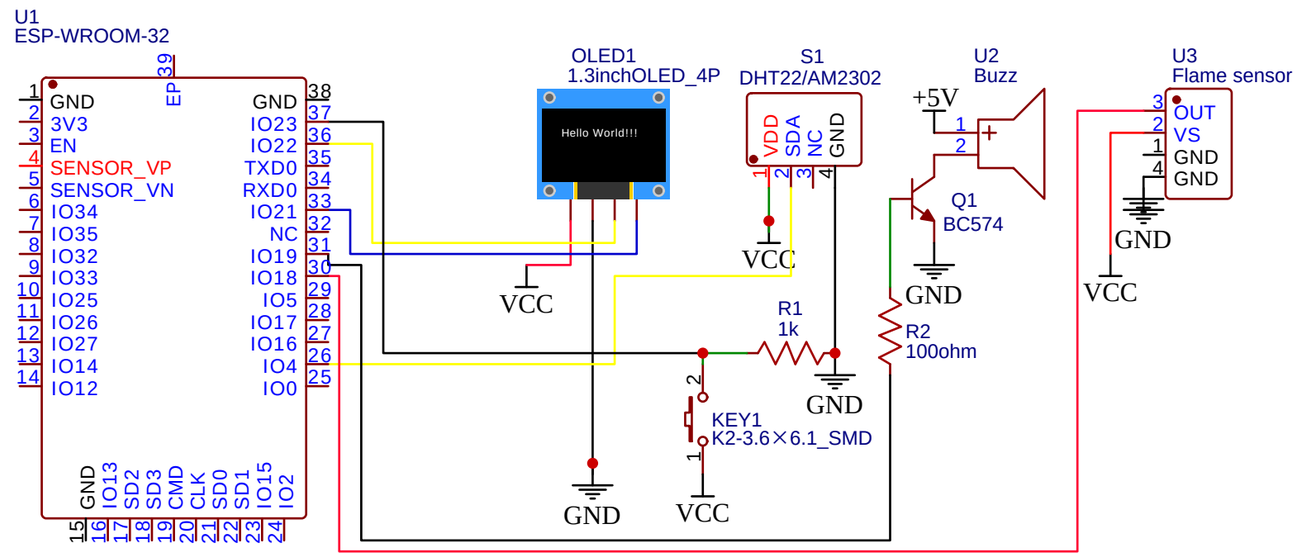

TITLE: Fire Thermosist		REV: 1.0
EasyEDA	Company: Abhishek	Sheet: 1/1
	Date: 2025-05-24 Drawn By: av828792@gmail.com	